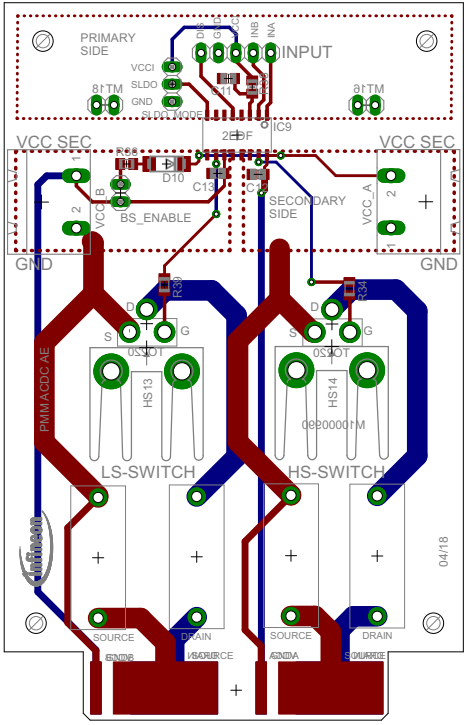

04.04.2018 17:42:27 f=0.91 C:\Users\MuMar\Desktop\Infineon Driver Demoboards\P10000990_KIT_DRIVER_2EDF7275F